L&L
Luce&Light

Made in Italy

INSTALLATION INSTRUCTIONS CLIPS PAIR
ISTRUZIONI DI INSTALLAZIONE COPPIA CLIP
INSTRUCTIONS D'INSTALLATION PAIRE DE CLIPS
INSTALLATION ANLEITUNG CLIPS
INSTRUCCIONES DE INSTALACIÓN PAR DE CLIPS

+DWMA04000
rev. 00 18/07/2024
C90

WMA04

Accessories / Accessori / Accessoires / Zubehör / Accesorios

CE UK CA

1

Model	A (mm)
Trevi 2.0-2.3-2.6-3.0	max 592
Trevi 2.1-2.4-2.7-3.1	max 1152
Trevi 2.2-2.5-2.8-3.2	max 1712

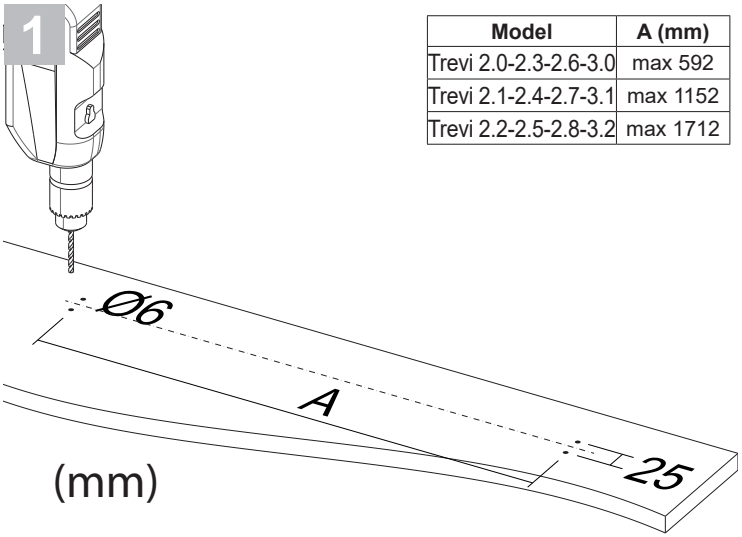

2

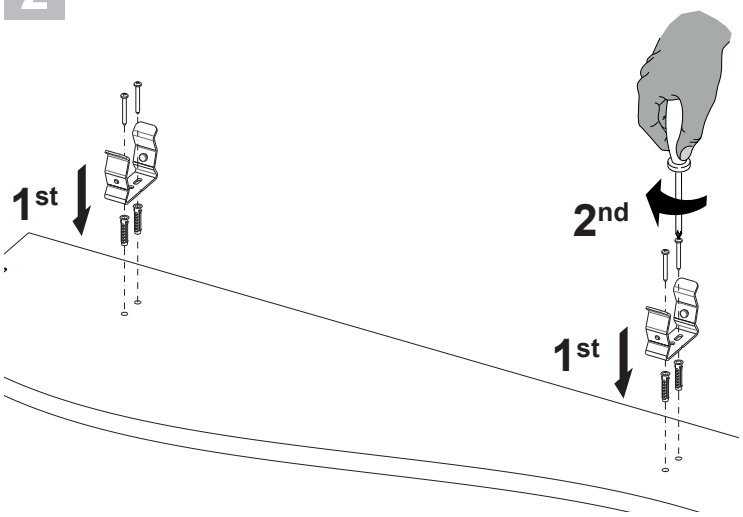

3

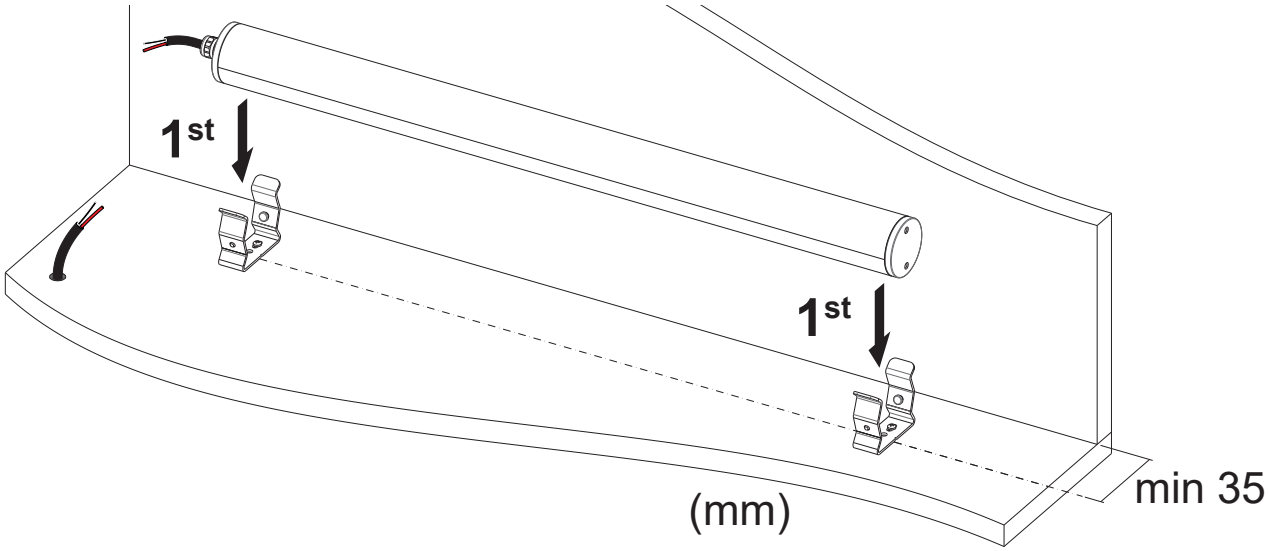

4

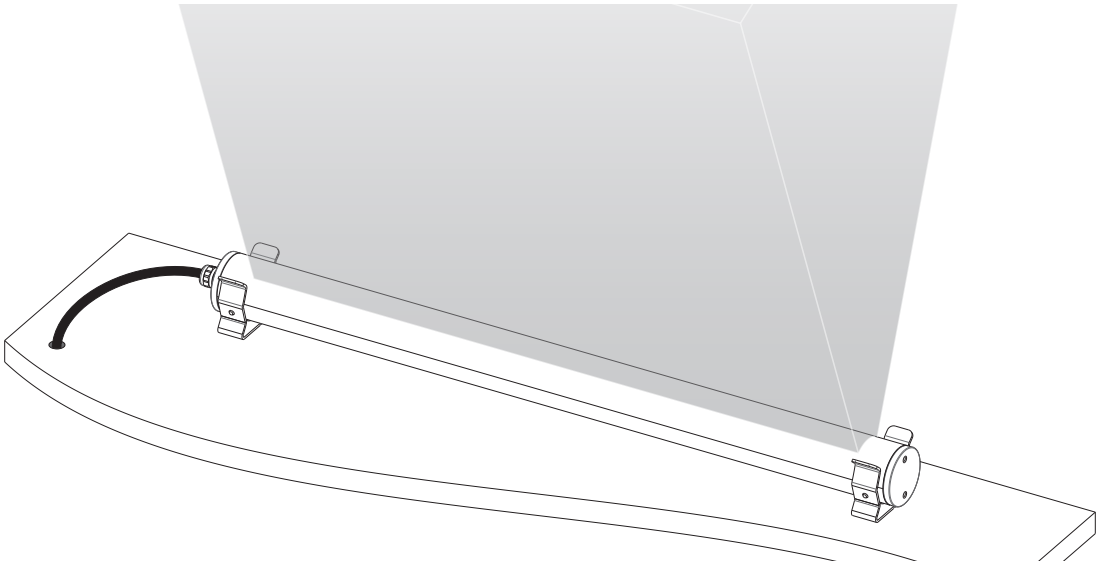

L&L Luce&Light srl / Via Trescalini, 5 / 36031 Dueville, Vicenza / Italy / T +39 0444 36 05 71 / F +39 0444 59 43 04
E lucelight@lucelight.it / www.lucelight.it